NON-EQUILIBRIUM PLASMA GENERATORS FOR ECOLOGY

V.Ya. Chernyak
Taras Shevchenko University, Faculty of Radiophysics, Dept. of Physical Electronics
Volodymyrska 64, Kyiv-33, 01033 Ukraine. chern@rpd.univ.kiev.ua

Introduction

First of all, the interest to nonequilibrium plasma in ecology is connected to search of the acceptable approaches in a problem high active and toxic waste (destruction and processing). Complexity of these tasks is connected with basic feature, practically anyone waste, - multicomponents of structure. For this reason traditional chemical (reagent methods) are low perspective for use in the given problem. So the Ministry of a Defence of USA has come to a conclusion about expediency of complete refusal from use of a chemical method for widely scale destruction of poisoning substances [1]. The analysis of the advanced oxidising technologies developed today within the framework of the given direction shows, that the methods as high-temperature combustion with use of furnace gases, and plasmatron combustion are most acceptable to destruction [2]. Another oxidative technology, Supercritical Water Oxidation (SCWO), is planned for use and is being tested at the pilot plant scale [3].

And still the majority of the advanced oxidising technologies switching combustion and SCWO are connected to occurrence of too big quantity of solid, liquid and gaseous waste and appropriate large loading on an environment because of low selectivity of influence on substance. Besides in present conditions of an exhaustion of natural resources we should remember that the atoms of rather valuable elements can be built in structure of toxic substance molecules.

The selectivity is the possibility of destruction of the fixed bound of molecules in the submission of molecular agents. Therefore the interest to selective technologies which allow to carry out of neutralisation of activity (toxicity) of substances with minimal destruction of initial molecules is quite clear. As only it can ensure the minimal power inputs and quantity of new waste after end of process.

Today it is theoretically possible to attribute to the basic selective technologies of destruction and processing of toxic substances only following:

1. Method of biological detoxification,
2. Resonant photochemistry,
3. Non-equilibrium plasmachemistry.

However practically we can not hope for a big-volume character of first two technologies in the near future.

Today the positive answer to a question " Is it possible the big-volume selective nonequilibrium plasmachemical technology existence? " is not obvious also. The given work is devoted to discuss of last results of experimental researches of production of strongly nonequilibrium plasma at atmospheric pressure for a realisation of selective plasmachemical influence on substances.

I. Sources of nonequilibrium plasma of high pressure

Many approaches on generation of non-equilibrium plasma of high-pressure about atmospheric and above today are known. The substance in various phase condition can be processed in the given discharge systems. But the special interest is represented by systems for the treatment of the substances in the nonconventional liquid phase: corona discharge [4], barrier discharge [5], combination of the discharges: corona with barrier [6], discharges in gas flows (gliding arc [7, 8], arc fixed in space in a cross flow of gas [9], secondary discharges supported by a plasma stream [9, 10].

II. Nonequilibrium plasma of the secondary discharges supported by a plasma flow

The plasma systems with the secondary discharges supported by a plasma flow have some peculiarities, which represent basic interest for realisation of selective plasmachemical influence on substances. For understanding of these peculiarities let's in more details consider the elementary scheme of realisation of such discharge [11].

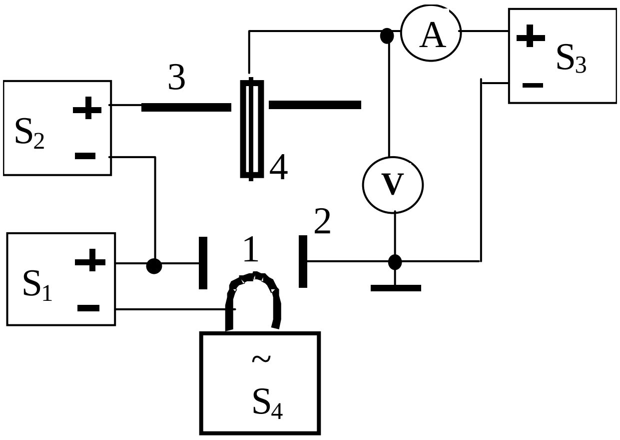

Fig. 1

The auxiliary independent discharge was lighted up between the tungsten cathode - 1 and cylindrical anode - 2 (Fig. 1). The secondary discharge is generated between a disk electrode - 3 (anode of a secondary discharge) and plasma of auxiliary discharges (cathode of a secondary discharge). The space potential, electron temperature and ion concentrations were determined from volt-ampere characteristics of a mobile cylindrical probe - 4 (diameter 0.3 mm and length 5 mm). The typical volt-ampere characteristics of such device are given in a Fig. 2, where a curve 1 - current of the secondary discharge - I_d, 2 - current of the auxiliary discharge, at Us=300V=Const and pressure of deuterium 0.1 torr. As we see dependence I_d (U_d) (curve 1) has a typical kind of the volt-ampere characteristic of the gas discharge with external ionise. The ionisation is determined basically external ionise and the extraction of charges created external ionise goes on the given dependence in area A, and the additional duplication of charges begins in an electrical field of the secondary discharge in area B.

However system of electrodes submitted on a fig. 1 can be described and in another way: electrodes 1, 2 - electrodes of the generator of plasma, and electrode 3 (anode of the secondary category) - electrode shipped in a plasma flow, which is generated by the gas discharge between electrodes 1-2. In this case we can consider an electrode 3 as some probe of the large size strongly perturbation plasma. Positive potential of an electrode 3 concerning plasma is set by a source S_2.

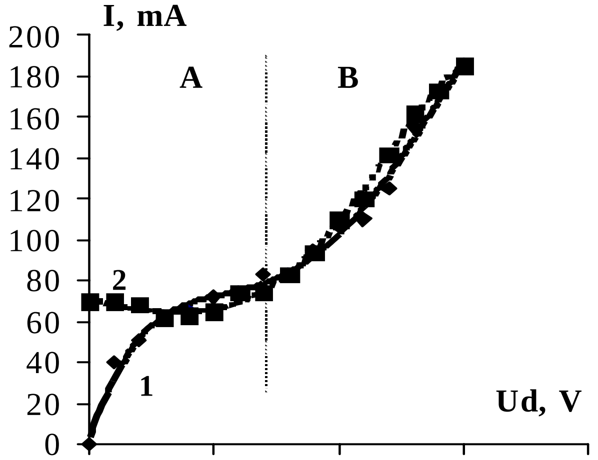

Fig. 2

But, as is known, any electrode shipped in plasma and having potential distinct from potential of space is shielded by layer of a space charge. In other words, there is a jump of potential between an electrode and plasma. The jump width is equal to layer width of a space charge ~ of Debay radius - λ_D.

Really, the researches of axial distributions of space potential in plasma of the given discharge system (Fig. 1) have shown presence of potential jump near to the anode of the secondary discharge (electrode 3) [11].

The space potential - U_0, electron temperature - T_e and ion concentrations - N_i were determined from volt-ampere characteristics of a mobile cylindrical probe - 4 (diameter 0.3 mm and length 5 mm).

The typical axial distributions of space potential are given on Fig. 3 at pressure of deuterium plasma P = 0.1 torr, U_s = 300 V. Curve 1 - U_d = +0 V, Curve 2 - U_d = +40 V, Curve 3 - U_d = +60 V, Curve 4 - U_d = +100 V.

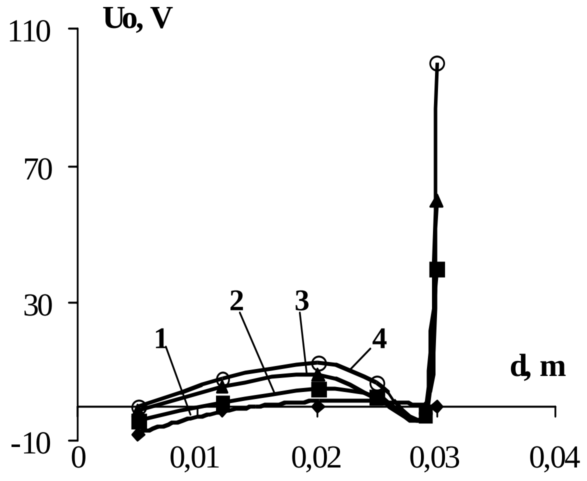

Fig. 3

Thus, the given results indicate the existence of potential jump ΔU near to the anode of the secondary discharge of low pressure supported by a plasma flow at currents of the secondary discharge I_d comparable with a current I_s of the auxiliary discharge which generates a plasma flow. The size of this jump ΔU can achieve a difference of potentials between the anode of the secondary discharge and anode of the auxiliary discharge at comparable currents of discharges. It should result in occurrence of high-energy electrons with energy about eΔU ≈ eU_d at absence of collisions in a space-charge layer, where e is an electron charge.

Unfortunately, today the direct measurements, which specify existence of potential jump near to the anode, are not present for the secondary discharge at atmospheric pressure.

However results of work [12] specify that the kind of volt-ampere characteristics of the secondary discharge poorly depends on pressure. Besides, today are indirect data which indicate the generation of fast electrons in plasma of the secondary discharge and their prevailing influence on the plasmachemical processes (sedimentation of diamond films on the anode of secondary discharge [13] and plasma treatment of water in the system with secondary discharge with "liquid" electrode [14]. So the typical absorption spectra of water after plasma treatment [14] are given on Fig. 4: where curves 1, 3 - the treatment of the plasma of the secondary discharge with "liquid" anode; 2, 4 - the treatment of the plasma of the secondary discharge with "liquid" cathode; 5 - the treatment of the independent discharge plasma; 1, 2 - the plasma creation gas is the mixture air and water aerosol; 3, 4 and 5 - the plasma creation gas is the dry air.

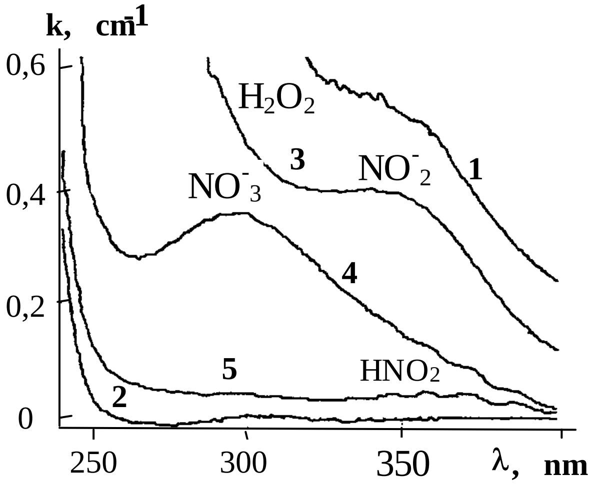

Fig. 4

These results indicate that the secondary discharge switching off reduces in an essential drop of a degree of nitrogen oxidation in water, i.e. the contribution of dissociate processes in a balance of nitrogen oxides is increased in a system.

SUMMARY

The data of the reviewed articles indicate on an opportunity of generation of highly non-equilibrium plasma by high-pressure.

Today already the broad class of generators of highly non-equilibrium plasma of atmospheric pressure exists on the basis both the conventional electrical discharges in a gas (corona, barrier and their combination) and of unconventional discharges in a transversal stream of gas (independent discharges – gliding arc, fixed in space an arc and rotated arc; and also secondary discharges supported by a plasma stream).

There is a jump of a potential near to the anode of a secondary discharge supported by an auxiliary independent discharge. The magnitude of this jump can be comparable to voltage drop across the secondary discharge. It indicates a possibility of shaping of electron beams reaching the anode of a secondary discharge with energies in tens and hundred eV, and allows to explain a series of effects observed at a sedimentation of diamond films and plasma treatment of water.

The technological schemes of gas-discharge systems with a liquid electrode are designed, which one allow to realise by an effective straight contact of stationary and quasistationary plasma with the treated solution. It introduces the special interest for the solution of such ecological problems as clearing of wastewater and destruction of the liquid-phase toxic agents.

REFERENCES

1. *Pushkin I. // Ecology and industry of Russia. 1998. №12. P. 37 – 40 (In Rus.).*
2. *Madhi A., Huber U. // Abstr. 4th Intern. Chemical and Biological Medical Treatment Symposium, Spiez Laboratory, Switzerland. 2002. P. 33-34.*
3. *Shaw R. // Abstr. 4th Intern. Chemical and Biological Medical Treatment Symposium, Spiez Laboratory, Switzerland. 2002. P. 44.*
4. *Tajima R., Ehara Y., Kishiba H., Ito T. // Contr. Pap. of Int. Symp. on High Pressure Low Temperature Plasma Chemistry. Greifswald. 2000. P. 412-416.*
5. *Chernyak V., Magdenko A., Trokhymchuk A., Tarasova Ya., Naumov V., Kravchenko A., Ulberg Z., Gruzina T., Olszewski S., Chekhovskaya T. // 15th Int. Symp. on Plasma Chemistry - ISPC 15. Orleans. 2001, P. 3017-3022.*
6. *Veldhuizen E., Hoeben W., Rutgers W. // Contr. Pap. V Int. School-Seminar on Non-equilibrium Processes and Their Applications. Minsk. 2000. P. 219-227.*
7. *Moussa D., Brisset J. // Contr. Pap. 5th Int. Symp. on High Pressure Low Temperature Plasma Chemistry. Milovy. 1996. P. 165- 169.*
8. *Kutepov F., Zaharov A., Maximov A. // Reports of Russian Academia of Science. Chemistry. 1997. V. 357. N6. P. 782-786 (In Rus.).*
9. *Chernyak V., Tarasova Ya., Trokhymchuk A., Koval S., Magdenko A., Kravchenko A.,. Tsyganovich O., Kolyaka I., Bren V., Yukhymenko V. // Contr. Pap. XIVth Symp. on Plasma Physics of Switching ARC. Brno. 2001. P. 31-34.*
10. *Chernyak V., Olszewski S., Cybulev P., Voronin P. // Contr. Pap. Intern. Symp. on High Pressure Low Temperature Plasma Chemistry (HAKONE V). Milovy. 1996. P. 235-239.*
11. *Chernyak V., Lebedev D., Buchnev V., Olszewski S. // Abstr. VII Ukrainian Conf. by Nuclear Fusion and Plasma Physic. Kyiv. 1999. P. 64 (In Ukr.).*
12. *Chernyak V., Buchnev V., Koval S., Trokhymchuk A. // Contr. Pap. 4th Czech-Russian Seminar "Electrophysical and Thermophysical Processes in Low-Temperature Plasma" Brno, Czech Republic, 2000. P. 153-156.*
13. *Baldwin S., Owano T., Kruger C. // Appl. Phys. Lett. 1995. V. 67. №2, P. 194-196.*
14. *Chernyak V., Buchnev V., Yukhymenko V., Trokhymchuk A., Yarosh V.// Bulletin of the University of Kiev, Series: Physics & Mathematics. 2001. N 3. P. 399-407 (In Ukr.).*